# High Pressure Single axis cylinder connector (90' Swivel) - SAS-100-XXX-X

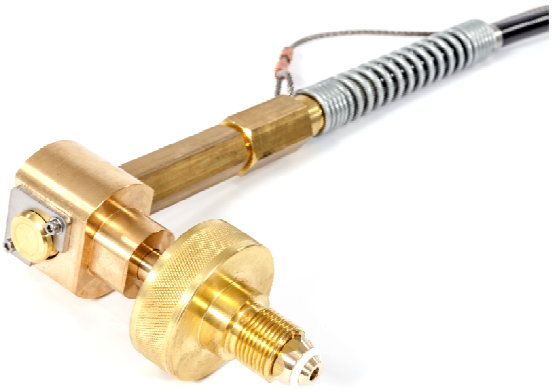

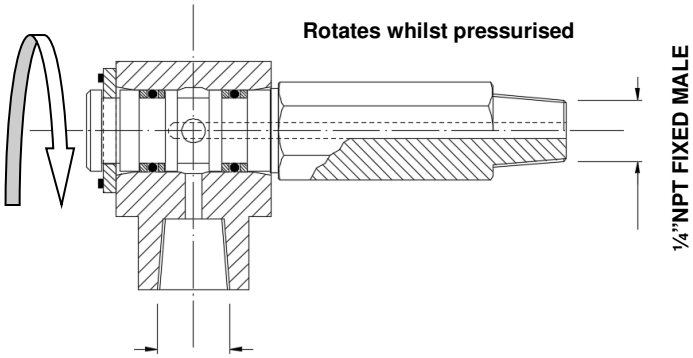


SAS-100-XXX-X

**Hose Description**

- Cylinder Connector suitable for industrial and medical gas filling solutions
- 90 Degrees orientation
- Cylinder connectors available with fitted hand wheels in blue resin
- This product has been designed to work at a maximum working pressure of 420 Bar

**End Fittings/Connections**

- ¼" NPT Fixed male inlet - Brass
- ¼" NPT Fixed Female outlet for interchangeable connectors - Brass

**International Standards approvals**

- ISO 1402 - Rubber & Plastic hoses – hydrostatic testing
- ISO 6803 - Rubber & Plastic hoses – Pressure impulses = 150,000.

**Pressures**

Design Pressure 420 Bar

**Available Connections**

*Other standards available upon request*

| | | Typical Industrial gas applications | | | |
|---|---|---|---|---|---|
| **Part Number** | **Type No.** | **02 *** | **Insert *** | **Flammable *** | **Other (Specialty/Mixes)** |
| SAS-100-BS341-X | 3,4,8 etc. | ✓ | ✓ | ✓ | Contact sales |
| SAS-100-NEVOC -X | 30, 32 etc. | ✓ | ✓ | ✓ | Contact sales |
| SAS-100-DIN 477-X | 3,4,8 etc. | ✓ | ✓ | ✓ | Contact sales |
| SAS-100-GCA-X | 540,580 etc. | ✓ | ✓ | ✓ | Contact sales |
| SAS-100-XXX-X | Other | ✓ | ✓ | ✓ | Contact sales |

*Please note gas applications are standard specific, so connection/media type must be in accordance*


Aeroflex Hose & Engineering Ltd.
Winchester House
11 Enterprise Way
Aviation Park West
Bournemouth Airport
Dorset BH23 6EW

T. 01202 895660
F. 01202 891177

www.aeroflex.co.uk



MEMBER
Certificate No. Q5377
Registered office: 902 Wimborne Road, Bournemouth BH9 2ND. Company registration no. 1506555.